# Palram 4u Bakery Display Units

## User manual

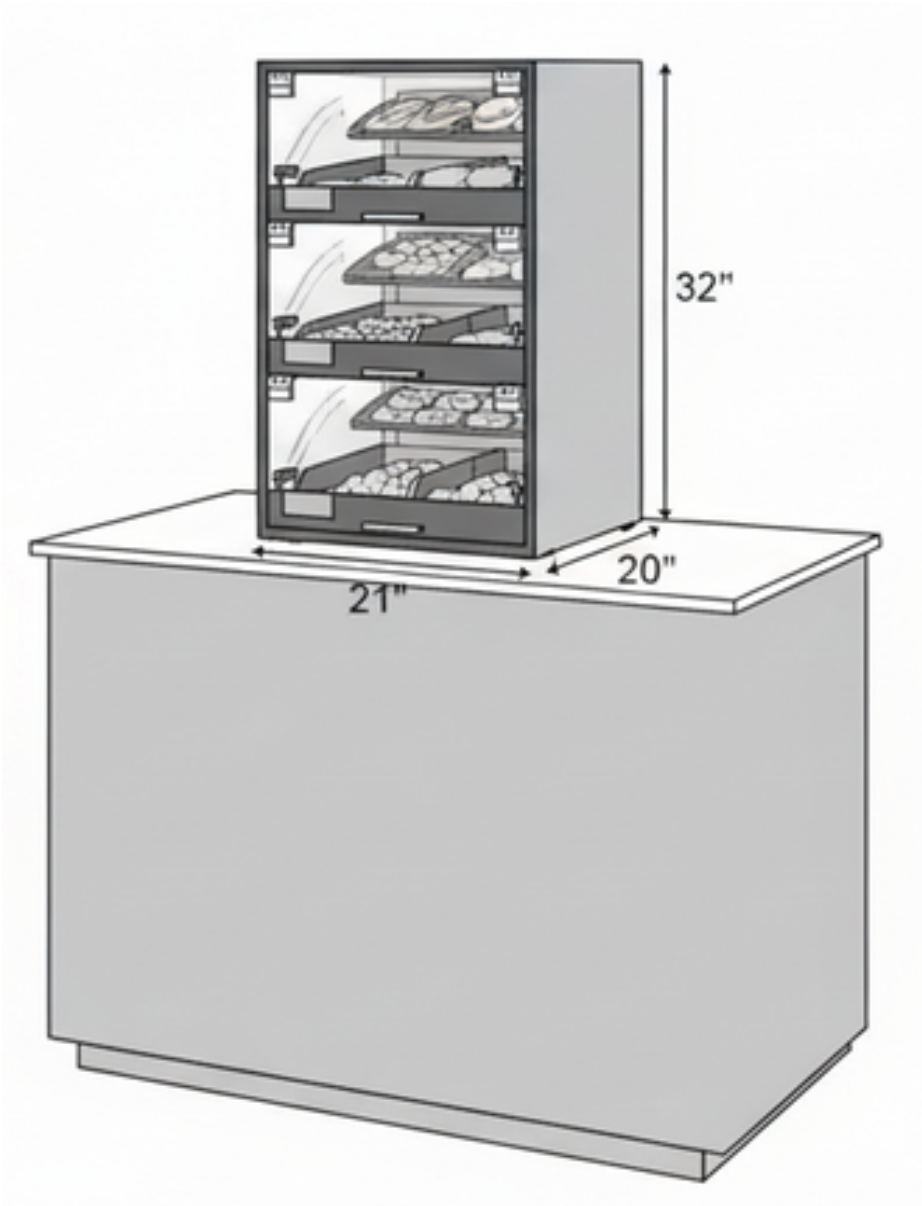


9735 Commerce Cir, Kutztown, PA 19530 | info@palram4u.com | 484-264-8318 | shopamerica.palram4u.com

PALRAM 4U

## Assembly Instructions

The unit is delivered fully assembled. The only required steps are:

1. Carefully remove the unit from its package.
2. Place the unit in the desired location.
3. In floorstand units, level the unit using the front leveling feet located at the bottom front section.
4. Peel off the protective stickers from the bakery trays.
5. Connect the unit to the electrical outlet.

## Operation Instructions – Usability

1. Top and bottom trays – both the top and bottom trays can be pulled out easily for thorough cleaning and for efficient restocking of fresh-baked goods.
2. All trays are removable and dishwasher-safe (use water and soap only; max 50 °C cycle).
3. Do not lubricate the drawer rails. The rails are self-lubricating, and oil attracts dust.
4. It is recommended to vacuum around the drawers and rails regularly to remove crumbs and dust.
5. Do not climb or stand on the drawers.

PALRAM 4U

## General Safety Instructions

1. Assemble on a flat surface – Place the unit's base on a level floor before assembling the parts. It is recommended to assemble on a padded surface (e.g., on cardboard) to protect the glass.
2. Glass precautions – Tempered glass is durable, but it can crack Due to temperature changes or point pressure. Clean it gently with a microfiber cloth, avoiding hot water and harsh chemicals.
3. Prohibited use – The drawers and display surfaces are not designed to be used as seats or steps;

Do not stand or climb on the drawers to prevent breakage and injuries.

## Electrical connection guidelines

1. Connect to appropriate voltage – Ensure the system is connected to a socket with a ground and matching voltage (110 V). Do not connect the units to an unsuitable voltage or use damaged extension cords.
2. Cable placement – Route the cable so that it does not touch moving drawers. Avoid leaving the cable in places where customers or employees might trip over it.
3. Avoid water contact – Do not touch the power cord with wet hands, and do not run the cable through a wet environment. If water penetrates the lighting unit, disconnect the electricity immediately and contact a qualified technician.

## Electrical connection guidelines

1. Cleaning agents – Use non abrasive cleaners and microfiber cloths; gentle and regular cleaning prevents stains and dust
2. Appropriate cleaners - It is recommended to use water and soap only and not strong or oily substances. The trays are dishwasher safe; if using a dishwasher, choose a gentle cycle and ensure the water temperature does not exceed 50 °C to maintain the material's integrity.
3. Drawers and shelves- Wipe the inside of the drawers and shelves with a damp cloth and food safe cleaner. Dry well before returning the trays.
4. Exterior - Wipe the cabinet exterior with a damp cloth to remove dust and dirt.On models with open shelves or compartments, remove crumbs and empty packages regularly.
5. Vacuuming – It is recommended to vacuum regularly using a vacuum cleaner with a soft brush around the drawers and rails to prevent the buildup of crumbs and dirt.
6. Avoid lubricating – Do not oil the drawer rails or moving parts. The rails are designed to be self lubricating.

# Discover the Full PALRAM 4U Bakery Collection

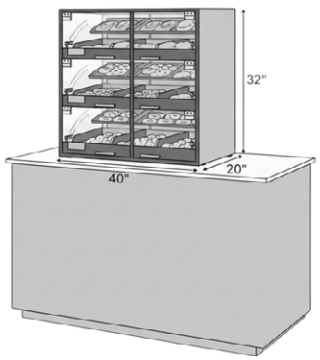


Counter-top for up to 18 SKUs

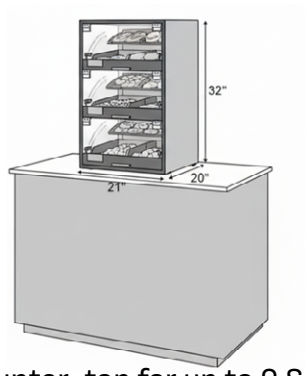


Counter-top for up to 9 SKUs

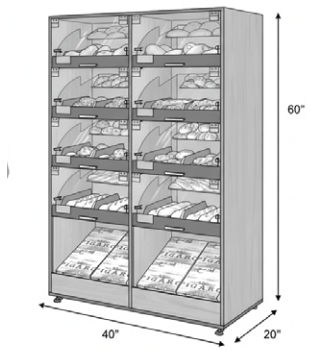


Endcap for up to 24 SKUs
open bottom compartments

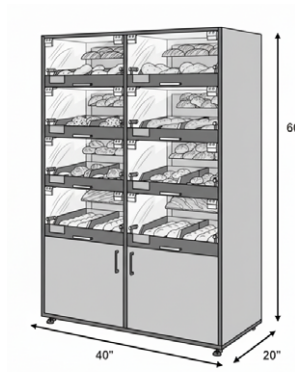


Endcap for up to 24 SKUs + storage

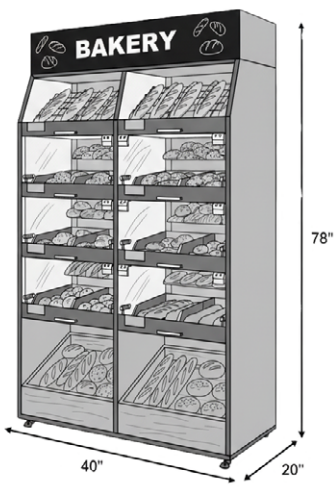


Backwall for up to 24 SKUs with upper open compartments + bottom open compartments

Backwall for up to 24 SKUs with
upper open compartments and bottom storage

shopamerica.palram4u.com

9735 Commerce Cir, Kutztown, PA 19530 | info@palram4u.com | 484-264-8318 | shopamerica.palram4u.com